HANGCHA GROUP CO., LTD.

Factory site: 666 Xiangfu Road,
Hangzhou, Zhejiang, China (311305)

Tel: +86-571-88926735 88926755
Fax: +86-571-88926789 88132890

sales@hcforklift.com **www.hcforklift.com**

HANGCHA GROUP CO., LTD. reserves the right to make any changes without notice concerning colors, equipment, or specifications detailed in this brochure, or to discontinue individual models. The colors of trucks, delivered may differ slightly from those in brochures.

Follow us on Facebook

Follow us on YouTube

Follow us on WeChat

Download "Hangcha Forklift" App

ISO45001
ISO45001:2018

ISO14001
ISO14001:2015

ISO9001
ISO9001:2015

HANGCHA trucks conform to the European Safety Requirements.

2025 VERSION 3/COPYRIGHT 2025/04

XE SERIES

ELECTRIC FORKLIFT TRUCK WITH LITHIUM POWER

With capacity of 6,000 to 10,000kg

Making Material Handling Easier

XE SERIES ELECTRIC FORKLIFT TRUCK WITH LITHIUM POWER

While inheriting the family design of electric forklifts, some key parts are universal with internal combustion trucks. The whole truck has been optimized in terms of performance, ergonomics, reliability, maintenance, outdoor working ability, and load capacity to meet the needs of customers for internal combustion forklift usage scenarios.

The XE series of 6-10 ton lithium battery forklifts are developed based on the advantages of Hangcha's "lithium battery special structure" and "permanent magnet synchronous technology".

ENVIRONMENTALLY FRIENDLY

- The hydraulic lifting system uses dual-pump confluence technology, combined with a powerful system, resulting in an overall improvement in performance.
- The leading "permanent magnet synchronous system" effectively reduces energy consumption and enhances endurance.

ENERGY EFFICIENT

- The charging port features a door-within-door design, with standard quick-change batteries, making both charging and battery changing convenient.
- Lithium batteries come standard with dual-gun fast charging ports, paired with dual-gun chargers for efficient energy replenishment.

SAFE AND RELIABLE

- Equipped with two independent cooling air ducts to ensure long-lasting, efficient performance.
- Standard features include turning deceleration, which reduces the turning radius for greater maneuverability and stability during operation.

Utilizes internal combustion truck structures, including the frame and front/rear axles, paired with large tires for increased ground clearance, making it more suitable for outdoor operations.

Designed for high load capacity, minimizing the risk of rear tipping and ensuring more stable operation.

IPX4 WATERPROOF

The truck features IPX4 protection rating, and the lithium battery is equipped with electric heating module to ensure normal operation in cold or rainy weather.

COMFORTABLE EXPERIENCE

XE SERIES

Standard features include a load-sensitive multi-way valve and lift potentiometer, providing good energy-saving effects and reducing operating force by 20%, with improved micro-motion performance.

LI-ION TECHNOLOGY

HANGCHA provides Li-ion battery (LiFePO4) with 6 years or 12000 hours warranty.

6 YEARS WARRANTY

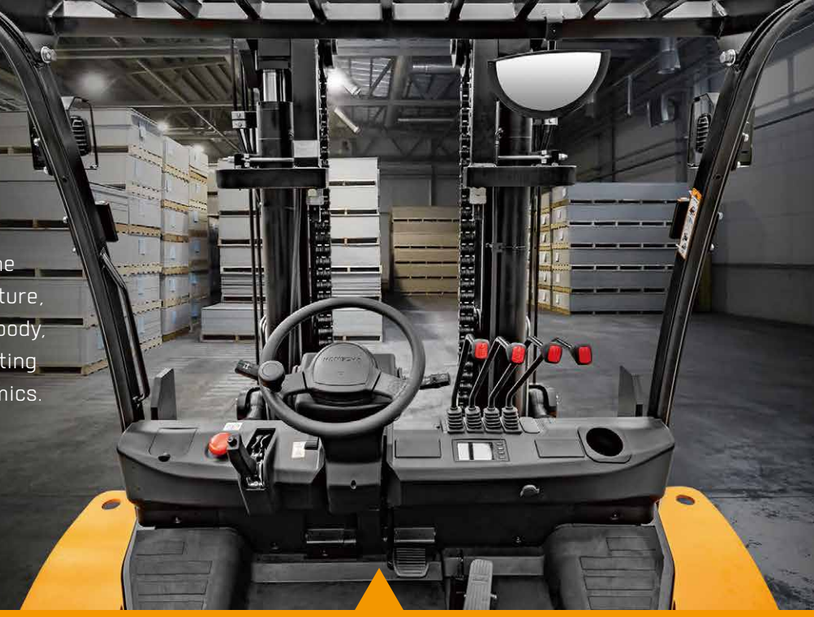

EXCELLENT VISION

- Inherits the advantages of the lithium battery special structure, resulting in a more compact body, better visibility, ample operating space, and excellent ergonomics.

Equipped with a panoramic rearview mirror and a reverse assist horn for more comfortable reversing operations.

Comes standard with a USB charging port and storage box for added convenience in daily use.

The color display smart instrument includes functions for viewing and adjusting key parameters, facilitating maintenance and fine-tuning.

EASY MAINTENANCE

The counterweight cover can be removed without tools, paired with a large-angle hood for clear visibility of maintenance components.

Optional battery list

	Capacity(Ah)	6.0-7.0t	8.0-10t
EVE	560	●	/
	690	○	●
	920	○	○
	1216	/	○
CATL	536	○	/
	684	○	○
	906	○	○
	1208	/	○

Note: ● Battery; ○ Battery Opt; / Not available

LITHIUM POWERED

LI-ION TECHNOLOGY
INNOVATIVE LITHIUM-ION

EMPOWER YOURSELF WITH THE BEST

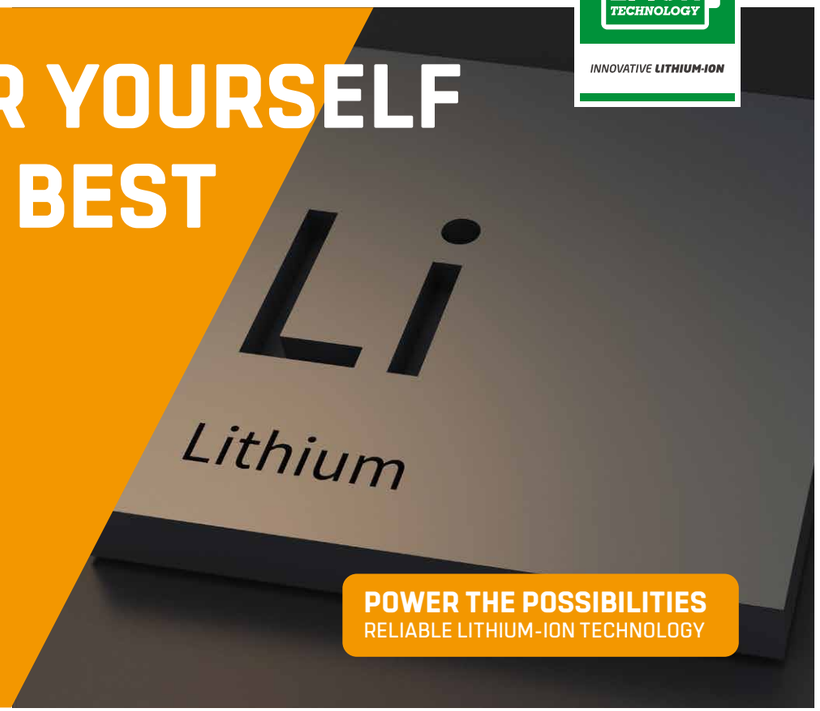

V96 LITHIUM ION

POWER THE POSSIBILITIES
RELIABLE LITHIUM-ION TECHNOLOGY

LITHIUM BATTERY ADVANTAGES

Long service life
4000 full charging cycles with at least 75% residual capacity.

Cold area application
Li-Ion batteries maintain high performance at temperatures below freezing.

Return on investment
Add flexibility to your operation,cost-saving in the long term, increased efficiencies.

High safety and reliability
Intelligent battery management monitoring every important function, no emission of battery gasses.

Maintenance free
No topping up of water or checking acid levels.

Opportunity charging
Full performance during several shifts thanks to effective interim charging.

High energy density
The high energy density of the Li-Ion battery ensures long working times and increases the high availability.

FEATURES & BENEFITS THE HANGCHA DIFFERENCE

Efficiency

By quick opportunity charging any downtime, such as a lunch break, can be efficiently used and the battery is recharged in a very short period of time. Interim charging does not affect the battery service life.

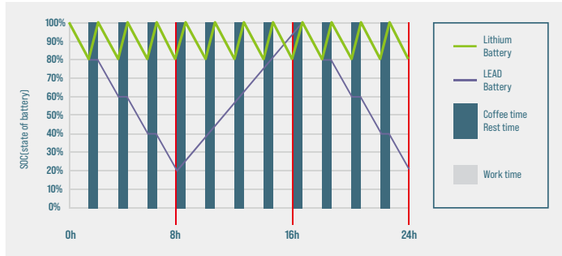

Safety

/ Intelligent battery management monitoring every important function.
/ Higher user safety, thanks to acid-free use.
/ User friendly due to avoided battery change.
/ No emission of battery gasses.

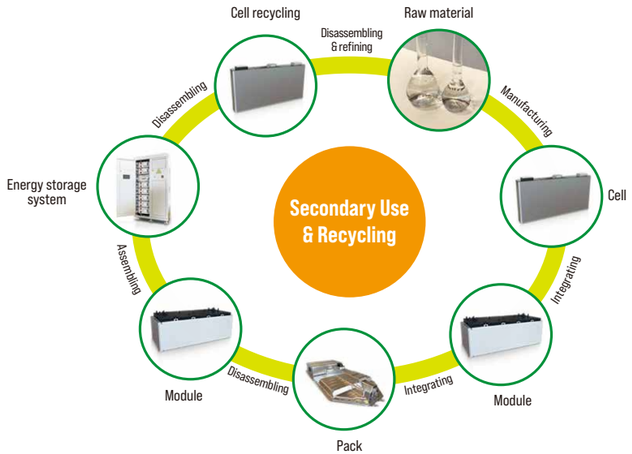

QUESTION 1

Q: What are the characteristics of lithium batteries, especially when used in high and low temperature environments?

Charging temperature:	-30℃-65℃
Discharge temperature:	-30℃-65℃
Storage environment temperature:	-30℃-65℃

After the truck key switch is closed, the instrument battery condition needs to be checked:
1. Confirm that there is no battery system alarm message on the instrument panel.
2. Please check the remaining power before use. It is recommended to use the SOC between 50% and 100%.
3. If the SOC is lower than 20%, it is not recommended to continue using it. Please charge it as soon as possible.

QUESTION 2

Q: What is the charging time and usage time calculation of forklift lithium battery?

1. Available power of lithium battery (kWh) = rated voltage × rated power × 90% (To avoid over-discharge damaging the battery, the forklift is equipped with low power protection (less than 10%)).
2. Charging time (h) = rated capacity of lithium battery (Ah) × 90% ÷ charger output current (A).
3. The power consumed for charging (kWh) = the available power of the lithium battery ÷ 93% (the charging efficiency of the charger is calculated as 93%).
4. Usage time (h) = available power of lithium battery ÷ energy consumption data.

For specific energy consumption values, please refer to the technical table on the sharing platform.

QUESTION 3

Q: How does Hangcha BMS work to ensure the safety of the lithium battery?

HANGCHA BMS (battery management system) can monitors the cells at all time. As a result, hangcha lithium power is the reliable solution.

Battery Safety Management:
Overcharge/over discharge protection
Overcurrent/over-temperature/low- temperature protection
Multi-level fault diagnosis protection
Double fault monitoring

Battery Parameter Detection:
Battery voltage detection and analysis
Battery current detection and analysis
Battery temperature detection and analysis

Equilibrium Management:
Equalization based on voltage mode
Equalization based on time mode
Equalization based on battery cell SOC
Active/passive equalization optional

Other Features:
Low cost,low power consumption
Historical data record
Flexible cascade expansion
CRC data validation

Technical Data

Distinguishing mark	1.1	Manufacturer		HANGCHA GROUP CO.,LTD.				
	1.2	Manufacturer's type designation		CPD60-XEY2-SI	CPD70-XEY2-SI	CPD80-XEY2-SI	CPD90-XEY2-SI	CPD100-XEY2-SI
	1.3	Drive: electric (battery or mains), diesel, petrol, fuel gas		Electric	Electric	Electric	Electric	Electric
	1.4	Operator type: hand, pedestrian, standing, seated, order-picker		Seated	Seated	Seated	Seated	Seated
	1.5	Rated capacity/rated load	kg	6000	7000	8000	9000	10000
	1.6	Load centre distance	c (mm)	600	600	600	600	600
	1.8	Load distance, centre of drive axle to fork	x (mm)	603.5	608.5	713.8	725.8	725.8
	1.9	Wheelbase	y (mm)	2350	2350	2600	2600	2600
Weight	2.1	Service Weight	kg	9600	10200	11900	13200	13800
	2.2	Axle loading, laden front/rear	kg	13790/1810	15180/2020	17650/2250	19770/2430	21280/2520
	2.3	Axle loading, unladen front/rear	kg	4710/4890	4580/5620	5600/6300	6180/7020	6190/7610
Tyres, chassis	3.1	Tyres: solid rubber, superelastic, pneumatic, polyurethane		pneumatic	pneumatic	pneumatic	pneumatic	pneumatic
	3.2	Tyre size, front		8.25-15-14PR	8.25-15-14PR	9.00-20-14PR	9.00-20-14PR	9.00-20-14PR
	3.3	Tyre size, rear		8.25-15-14PR	8.25-15-14PR	9.00-20-14PR	9.00-20-14PR	9.00-20-14PR
	3.5	Wheels, number front / rear (x = driven wheels)		4x/2	4x/2	4x/2	4x/2	4x/2
	3.6	Tread, front	b_{10} (mm)	1489	1489	1628	1628	1628
	3.7	Tread, rear	b_{11} (mm)	1700	1700	1700	1700	1700
Dimensions	4.1	Tilt of mast/fork carriage forward/backward	a/b (°)	6/12	6/12	6/12	6/12	6/12
	4.2	Height, mast lowered	h_1 (mm)	2500	2500	2700	2850	2850
	4.3	Free lift	h_2 (mm)	170	175	200	200	200
	4.4	Lift	h_3 (mm)	3000	3000	3000	3000	3000
	4.5	Height, mast extended	h_4 (mm)	4407	4407	4210	4555	4555
	4.7	Height of overhead guard (Cabin)	h_6 (mm)	2470(2440)	2470(2440)	2580(2550)	2580(2550)	2580(2550)
	4.8	Seat height/stand height	h_7 (mm)	1463	1463	1573	1573	1573
	4.12	Coupling height	h_{10} (mm)	600	600	640	640	640
	4.19	Overall length	l_1 (mm)	4804	4809	5523	5535	5535
	4.20	Length to face of forks	l_2 (mm)	3604	3609	4023	4035	4035
	4.21	Overall width(single/dual front tyres)	b_1/b_2 (mm)	-/1994	-/1994	-/2197	-/2197	-/2197
	4.22	Fork dimensions	s/e/l(mm)	60/150/1220	65/150/1220	75/160/1520	80/160/1520	80/160/1520
	4.23	Fork carriage ISO 2328, class/type A,B		4A	4A	/	/	/
	4.24	Fork-carriage width	b_3 (mm)	1976	1976	2153	2153	2153
	4.31	Ground clearance, laden, below mast	m_1 (mm)	200	200	250	250	250
	4.32	Ground clearance, centre of wheelbase	m_2 (mm)	235	235	320	320	320
	4.34.1	Aisle width for pallets 1000 x 1200 crossways	A_{st} (mm)	5163.5	5168.5	5653.8	5665.8	5665.8
	4.34.2	Aisle width for pallets 800 x 1200 lengthways		5363.5	5368.5	5853.8	5865.8	5865.8
	4.35	Turning radius	W_a (mm)	3360	3360	3740	3740	3740
	4.36	Internal turning radius	b_{13} (mm)	/	/	/	/	/
Performance data	5.1	Travel speed, laden/unladen	km/h	19/20	19/20	16/16	16/16	16/16
	5.2	Lift speed, laden/unladen	mm/s	410/500	360/440	340/430	280/350	280/350
	5.3	Lowering speed, laden/unladen	mm/s	480/420	480/420	460/400	460/400	460/400
	5.6	Max. Drawbar pull, laden/unladen	N	35000	35000	35000	35000	35000
	5.8	Max. gradeability, laden/unladen	%	20/30	19/30	19/25	16/22	15/21
	5.9	Acceleration time, laden/unladen (0-10m)	s	/	/	/	/	/
	5.10	Service brake		Hydraulic	Hydraulic	Hydraulic	Hydraulic	Hydraulic
	5.11	Parking brake		Mechanical	Mechanical	Mechanical	Mechanical	Mechanical
Electric-engine	6.1	Drive motor rating S2 60 min	kW	40AC	40AC	40AC	40AC	40AC
	6.2	Lift motor rating at S3 15%	kW	30.2AC	30.2AC	30.2AC	30.2AC	30.2AC
	6.3	Battery acc. to DIN 43531/35/36 A,B,C, no		/	/	/	/	/
	6.4	Battery voltage, nominal capacity	(V)/(Ah) or kWh	96/560	96/560	96/690	96/690	96/690
	6.5	Battery weight	kg	660	660	770	770	770
Addition data	10.1	Operating pressure for attachments	MPa	10	10	10	10	10
	10.2	Oil volume for attachments	ℓ/min	75	75	90	90	90

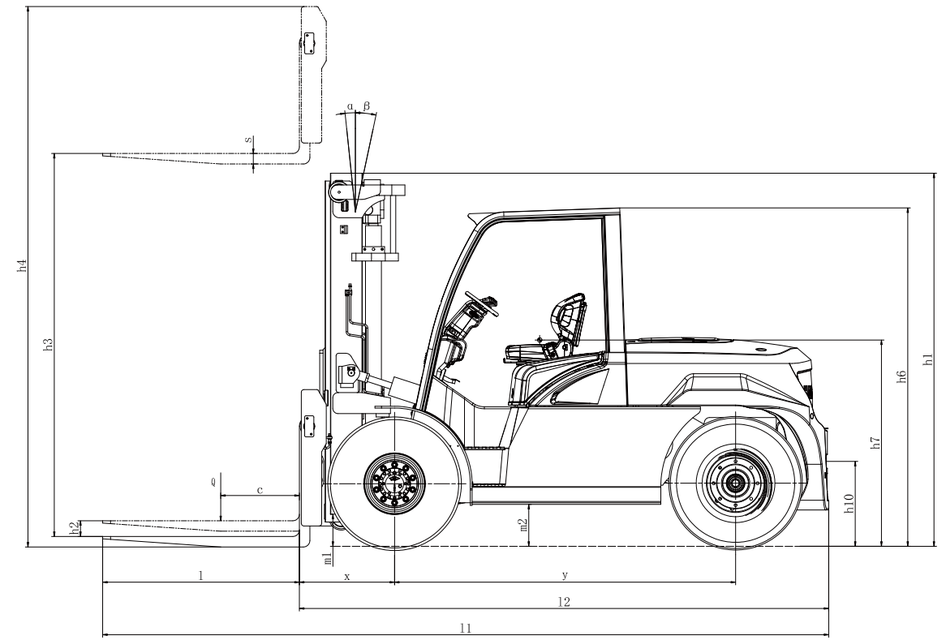

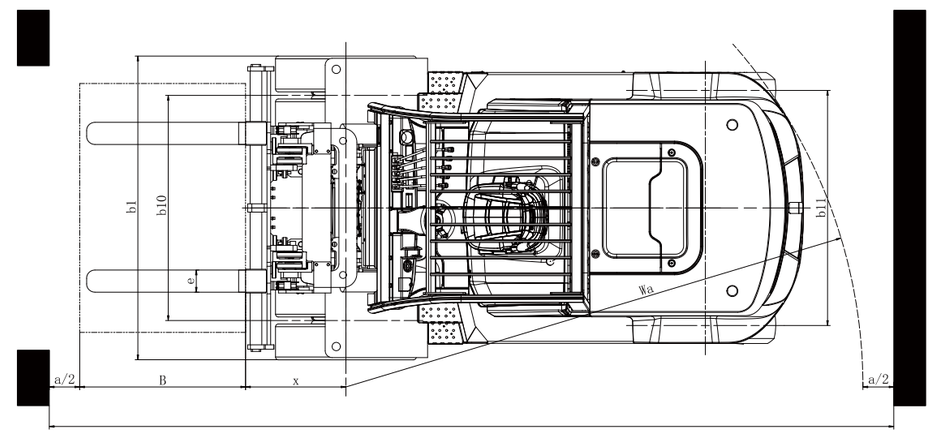

AST=Wa+x+B+a a=200 mm safety clearance

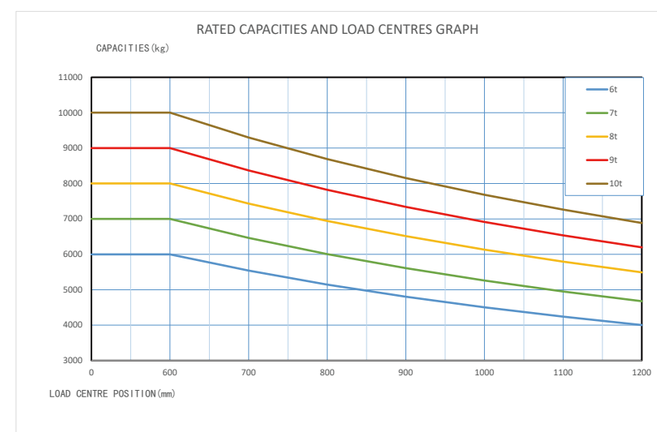

6.0-7.0t Mast: (pneumatic)

Type	Model		Lifting height	Lowered overall height	Overall height			Free lifting height				Front Overhang		Tilt Range	Capacity (Mast vertical to ground)	
					Without backrest	With backrest		Without backrest		With backrest				F/R	Load capacity at 600mm Dual tire	
	6.0t	7.0t				6.0t	7.0t	6.0t	7.0t	6.0t	7.0t	6.0t	7.0t		6.0t	7.0t
			mm	mm	mm	mm	mm	mm	mm	mm	mm	mm	mm	(°)	kg	kg
Duplex wide view mast	XHP60M250	XHP70M250	2500	2250	3907	3495	3667	170	175	170	175	603.5	608.5	6/12	6000	7000
	XHP60M270	XHP70M270	2700	2350	4107	3695	3867	170	175	170	175	603.5	608.5	6/12	6000	7000
	XHP60M300	XHP70M300	3000	2500	4407	3995	4167	170	175	170	175	603.5	608.5	6/12	6000	7000
	XHP60M330	XHP70M330	3300	2650	4707	4295	4467	170	175	170	175	603.5	608.5	6/12	6000	7000
	XHP60M360	XHP70M360	3600	2800	5007	4595	4767	170	175	170	175	603.5	608.5	6/12	6000	7000
	XHP60M400	XHP70M400	4000	3000	5407	4995	5167	170	175	170	175	603.5	608.5	6/12	6000	7000
	XHP60M430	XHP70M430	4300	3200	5707	5300	5467	170	175	170	175	603.5	608.5	6/6	6000	7000
	XHP60M450	XHP70M450	4500	3300	5907	5500	5667	170	175	170	175	603.5	608.5	6/6	6000	7000
	XHP60M480	XHP70M480	4800	3450	6207	5800	5967	170	175	170	175	603.5	608.5	6/6	6000	7000
	XHP60M500	XHP70M500	5000	3550	6407	6000	6167	170	175	170	175	603.5	608.5	6/6	6000	7000
	XHP60M550	XHP70M550	5500	3850	6907	6550	6667	170	175	170	175	603.5	608.5	3/6	5500	6400
	XHP60M600	XHP70M600	6000	4100	7407	7050	7167	170	175	170	175	603.5	608.5	3/6	5200	6200
Duplex full-free mast	XHP60U250	XHP70U250	2500	2185	3637	3455	3615	1048	1048	1230	1070	631.5	636.5	6/12	6000	7000
	XHP60U270	XHP70U270	2700	2300	3837	3655	3815	1163	1163	1345	1185	631.5	636.5	6/12	6000	7000
	XHP60U300	XHP70U300	3000	2450	4137	3955	4115	1313	1313	1495	1335	631.5	636.5	6/12	6000	7000
	XHP60U330	XHP70U330	3300	2600	4437	4255	4415	1463	1463	1645	1485	631.5	636.5	6/12	6000	7000
	XHP60U360	XHP70U360	3600	2750	4737	4555	4715	1613	1613	1795	1635	631.5	636.5	6/12	6000	7000
	XHP60U400	XHP70U400	4000	2950	5137	4955	5115	1813	1813	1995	1835	631.5	636.5	6/12	6000	7000
Triplex full-free mast	XHP60N450	XHP70N450	4500	2725	5907	5735	5735	1328	1328	1500	1500	672	677	6/6	5300	6200
	XHP60N480	XHP70N480	4800	2825	6207	6035	6035	1428	1428	1600	1600	672	677	6/6	5300	6100
	XHP60N500	XHP70N500	5000	2875	6407	6213	6213	1478	1478	1672	1672	672	677	6/6	5300	6100
	XHP60N550	XHP70N550	5500	3075	6907	6785	6785	1678	1678	1800	1800	672	677	3/6	5000	5900
	XHP60N600	XHP70N600	6000	3225	7407	7235	7235	1828	1828	2000	2000	672	677	3/6	4800	5300
	XHP60N650	XHP70N650	6500	3375	7907	7713	7713	1978	1978	2172	2172	672	677	3/6	3800	4300
	XHP60N700	XHP70N700	7000	3675	8407	8385	8385	2278	2278	2300	2300	672	677	3/6	3100	3600

6-7t:Height of standard load backrest is 1270mm.

8.0-10t Mast: (pneumatic)

Type	Model		Lifting height	Lowered overall height		Overall height		Free lifting height		Front Overhang		Tilt Range	Capacity (Mast vertical to ground)		
						Without backrest		Without backrest				F/R	Load capacity at 600mm Dual tire		
	8.0t	9.0/10t		8.0t	9.0/10t	8.0t	9.0/10t	8.0t	9.0/10t	8.0t	9.0/10t		8.0t	9.0t	10t
			mm	mm	mm	mm	mm	mm	mm	mm	mm	(°)	kg	kg	kg
Duplex wide view mast	X80M250	X100M250	2500	2450	2600	3710	4055	200	200	714	726	6/12	8000	9000	10000
	X80M270	X100M270	2700	2550	2700	3910	4255	200	200	714	726	6/12	8000	9000	10000
	X80M300	X100M300	3000	2700	2850	4210	4555	200	200	714	726	6/12	8000	9000	10000
	X80M330	X100M330	3300	2850	3000	4510	4855	200	200	714	726	6/12	8000	9000	10000
	X80M350	X100M350	3500	2950	3100	4710	5055	200	200	714	726	6/12	8000	9000	10000
	X80M360	X100M360	3600	3000	3150	4810	5155	200	200	714	726	6/12	8000	9000	10000
	X80M400	X100M400	4000	3200	3350	5210	5555	200	200	714	726	6/12	8000	9000	10000
	X80M430	X100M430	4300	3400	3550	5510	5855	200	200	714	726	6/6	8000	9000	10000
	X80M450	X100M450	4500	3500	3650	5710	6055	200	200	714	726	6/6	8000	9000	10000
	X80M480	X100M480	4800	3650	3800	6010	6355	200	200	714	726	6/6	8000	9000	10000
	X80M500	X100M500	5000	3750	3900	6210	6555	200	200	714	726	6/6	8000	9000	10000
	X80M550	X100M550	5500	4050	4200	6740	7055	200	200	714	726	3/6	7200	8500	9000
	X80M600	X100M600	6000	4300	4450	7240	7555	200	200	714	726	3/6	6800	7500	8000
	X80M650	X100M650	6500	4600	4750	7790	8055	200	200	714	726	3/6	5600	6000	6700
Duplex full-free mast	X80U230	X100U230	2300	2350	2500	3505	3845	1145	955	719	744	6/12	8000	9000	10000
	X80U250	X100U250	2500	2450	2600	3705	4045	1245	1055	719	744	6/12	8000	9000	10000
	X80U270	X100U270	2700	2550	2700	3905	4245	1345	1155	719	744	6/12	8000	9000	10000
	X80U300	X100U300	3000	2700	2850	4205	4545	1495	1305	719	744	6/12	8000	9000	10000
	X80U330	X100U330	3300	2850	3000	4505	4845	1645	1455	719	744	6/12	8000	9000	10000
	X80U360	X100U360	3600	3000	3150	4805	5145	1795	1605	719	744	6/12	8000	9000	10000
	X80U400	X100U400	4000	3200	3350	5205	5545	1995	1805	719	744	6/12	8000	9000	10000
Triplex full-free mast	X80N450	X100N450	4500	2750	2850	5775	6055	1485	1305	759	794	6/6	6800	8000	8500
	X80N480	X100N480	4800	2850	2950	6075	6355	1585	1405	759	794	6/6	6800	8000	8500
	X80N500	X100N500	5000	2950	3050	6360	6555	1600	1505	759	794	6/6	6300	8000	8200
	X80N550	X100N550	5500	3100	3200	6810	7055	1800	1655	759	794	3/6	5900	7500	7700
	X80N600	X100N600	6000	3250	3350	7275	7555	1985	1805	759	794	3/6	5400	6700	7000
	X80N650	X100N650	6500	3530	3630	7840	8055	2200	2085	759	794	3/6	4800	5800	6200
	X80N700	X100N700	7000	3700	3800	8310	8555	2400	2255	759	794	3/6	4000	4800	5200

Features

Color	Standard	Options
Yellow-black	●	
Other customized color		○
Particular market		
CE Standard		○
Neutral label		○
Cold storage environment		
-30°C		○
Mast		
Duplex mast	●	
Tilt cylinder cover	●	
See the mast specification		○
Tilt cylinder boot		○
Fork and attachment		
Fork hook on type (6.0-7.0t)	●	
Hydraulic Fork Positioning (8.0-10t)	●	
Fork carriage	●	
Load backrest (6.0-7.0t)	●	
Other fork length		○
Other attachments		○
Load backrest (8.0-10t)		○
Tires		
Pneumatic tire (dual)	●	
Solid tire (dual)		○
White no marked solid tire (dual)		○
Multiway valve		
2nd load-sensing valve(6-7t)	●	
4th load-sensing valve(8-10t)	●	
Potentionmeter for lift	●	
3rd load-sensing valve(6-7t)		○
4th load-sensing valve(6-7t)		○
5th load-sensing valve(6-10t)		○
Tiller		
Lifting and tilting level	●	
Fingertip system		○
Battery		
Quick change lithium battery (GB standard dual plug)	●	
Lithium battery side roll out	●	
Quick change big capacity lithium battery (GB standard dual plug)		○
Light		
LED combination head lamp	●	
LED rear combination lamp	●	
Warning light		○
Acoustic and optical alarm lamp		○
LED rear lamp		○
Blue/red light(F/R/FGR)		○
Blue/red light Three-Way Linear Projector Light		○
Horn		
Electric horn	●	
Reverse buzzer	●	
Right rear armrest with horn button	●	
Forward buzzer		○
Smart module		
FIMS(Fleet intelligent management system)		○

Features

Safety configuration	Standard	Options
Turning deceleration	●	
Emergency power-off switch	●	
Fuse box	●	
Soft landing	●	
Reversing radar		○
Reversing camera		○
Front /front and rear driving recorder		○
OPS system		○
Fire extinguisher		○
Ascending buffering		○
Bele alarm		○
Overspeed alarm/Speed limit(adjustable)		○
Common key		○
Instrument rack space		
Smart color-screen instrument (speed mode selection)	●	
Combination switch	●	
USB port	●	
Storage box	●	
Cigarette lighter		○
Pin code (start by swiping a card)		○
Fingerprint lock		○
Driving space		
Standard overhead guard	●	
Central rear view mirror	●	
PVC ceiling		○
Elevated/Lowered overhead guard		○
F/R windshield (with/without windshield wiper)		○
Cab		○
Fan		○
Air conditioner		○
Heater		○
Left and right rear view mirrors		○
Seat		
Standard seat	●	
Fully-suspended seat		○
Semi-suspended seat		○
Other standard configuration		
Traction controller(-1),pump controller(-2)	●	
Traction motor(-1),pump motor(-2)	●	
Silent gear pump (-2)	●	
Filling valve+accumulator	●	
Oil return filter	●	
Foot pedal pad	●	
Pin	●	
Stamping side panel and hood	●	