HANGCHA GROUP CO., LTD.

Factory site: 666 Xiangfu Road,
Hangzhou, Zhejiang, China (311305)

Tel: +86-571-88926735 88926755
Fax: +86-571-88926789 88132890

sales@hcforklift.com www.hcforklift.com

HANGCHA GROUP CO., LTD. reserves the right to make any changes without notice concerning colors, equipment, or specifications detailed in this brochure, or to discontinue individual models. The colors of trucks, delivered may differ slightly from those in brochures.

Follow us on Facebook

Follow us on YouTube

Follow us on WeChat

Download "Hangcha Forklift" App

ISO45001:2018

ISO14001:2015

ISO9001:2015

HANGCHA trucks conform to the European Safety Requirements.

2026 VERSION 2/COPYRIGHT 2026/04

XA SERIES

MINI POTENTIAL ENERGY RECOVERY STACKER

With capacity of 1,200 to 1,500kg

Making Material Handling Easier

XA SERIES STACKER

POTENTIAL ENERGY RECOVERY

The XA Series 1.2t-1.5t Mini Potential Energy Recovery Stacker is a newgeneration product developed by Hangcha for warehousing and logistics applications.

It adopts advanced permanent magnet brushless technology with standard Potential energy recovery, and extended runtime.

Advanced Performance | **Comfortable Operation** | **High Reliability**

Appearance

The XA Series Mini Potential Energy Recovery Stacker features professional industrial design, inheriting the family design concept of the XA series. The vehicle has smooth lines with dynamic aesthetics, compact dimensions, and full consideration of ergonomics, conforming to the latest design trends.

MORE SMART MORE POWER

Standard potential energy recovery system for extended runtime, with proportional lifting and lowering capability.

High Performance

- Equipped with permanent magnet brushless motor, delivering high performance with low heat generation and low noise.
- Permanent magnet brushless control system with lower energy consumption.
- CAN communication tiller head with standard display screen for convenient and quick fault diagnosis, integrated with key switch, card reader or password lock, offering rich functionality.

LIFT HEAVY. WORRY FREE.

- Fourpoint support design with reasonable drive wheel load distribution, ensuring good traction for all wheels while maintaining excellent stability and visibility.
- Interlock switch adopts noncontact proximity switch with extremely high reliability.

Reliability

Mature and stable hydraulic unit with low noise, low vibration, and smooth, reliable lifting and lowering.

The chassis adopts highstrength steel plate frame structure with large residual load capacity and long service life.

Key switch with standard dust cover for dust, water, and oil resistance, greatly improving reliability in harsh working conditions.

Stampedformed forks with higher strength and impact resistance, combined with fork tip guidance to further improve operational efficiency.

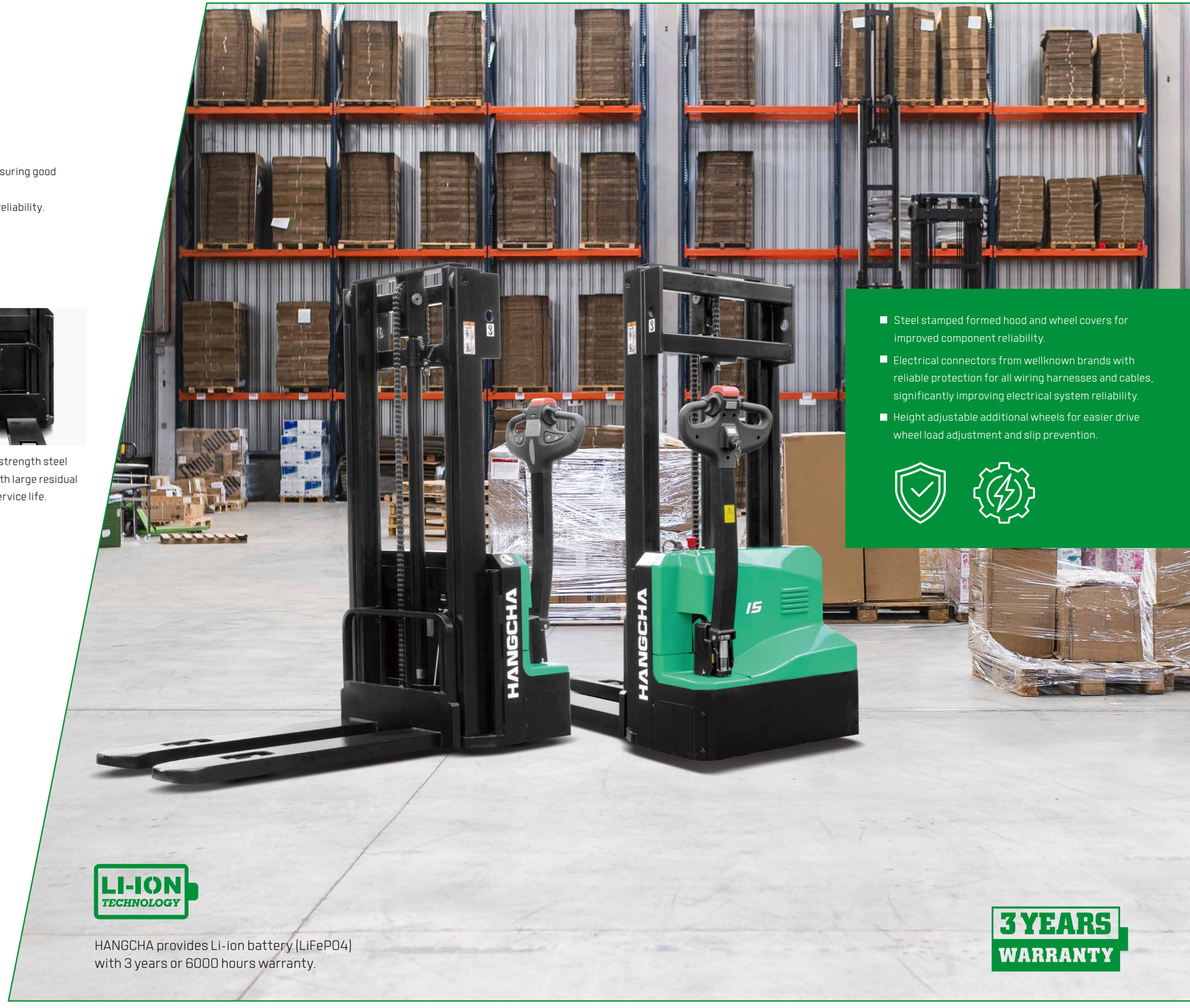

- Steel stamped formed hood and wheel covers for improved component reliability.
- Electrical connectors from wellknown brands with reliable protection for all wiring harnesses and cables, significantly improving electrical system reliability.
- Height adjustable additional wheels for easier drive wheel load adjustment and slip prevention.

LI-ION TECHNOLOGY

HANGCHA provides Li-ion battery (LiFePO4) with 3 years or 6000 hours warranty.

3 YEARS WARRANTY

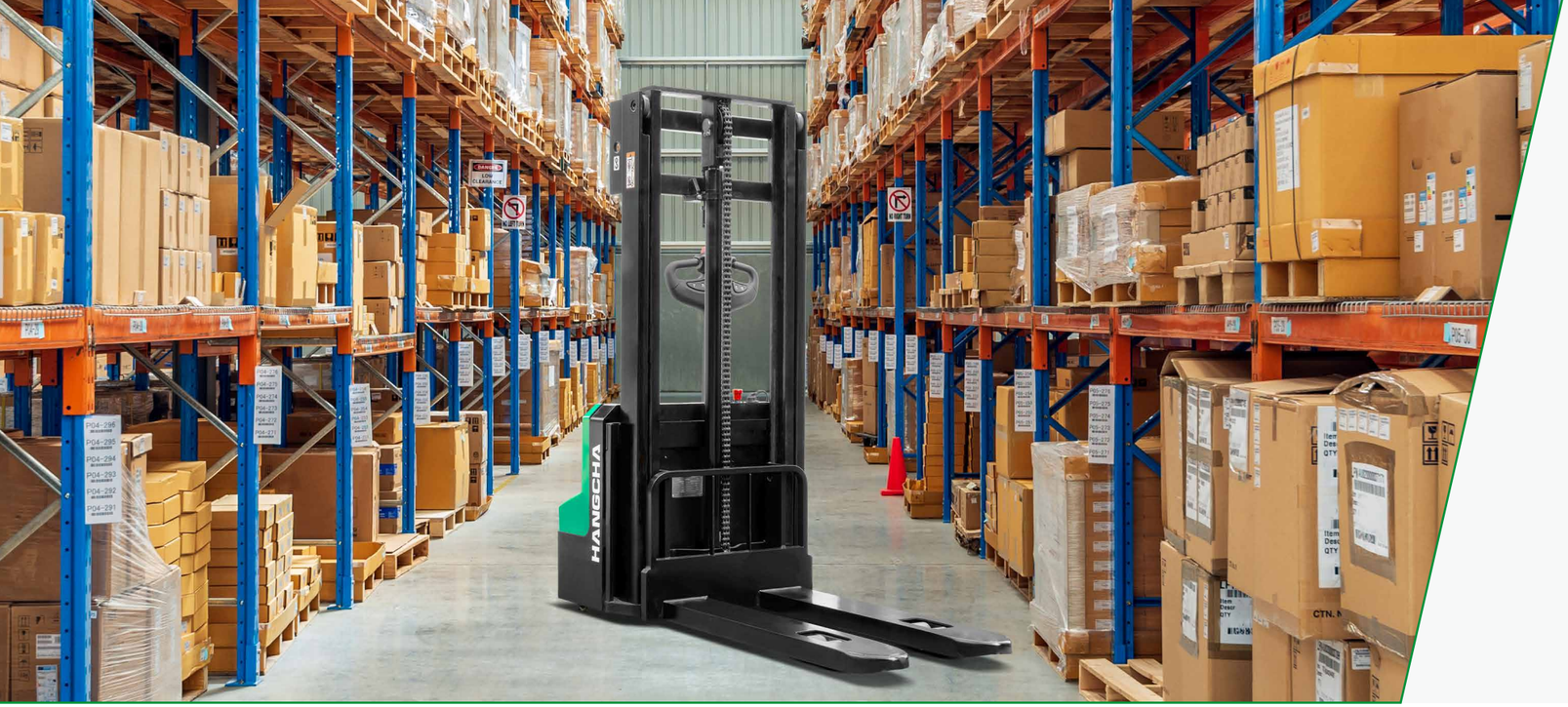

Maintenance

- Permanent magnet brushless motor requires no maintenance.
- Rear hood can be easily removed for clear visibility of components, making overall maintenance very convenient.
- All rotating shafts are equipped with lubricated bushings for easy maintenance and long service life.
- Modular mast design for convenient maintenance.

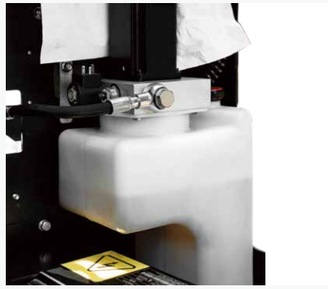

Side panel can be easily opened for more convenient motor removal and maintenance.

PROTECT YOUR INVESTMENT.

Safety

The emergency reverse button on the tiller head can effectively protect the operator from injury when encountering emergencies during reverse travel.

- Equipped with release braking and emergency braking functions to ensure driving safety.
- Equipped with ramp antirollback function to ensure operational safety.

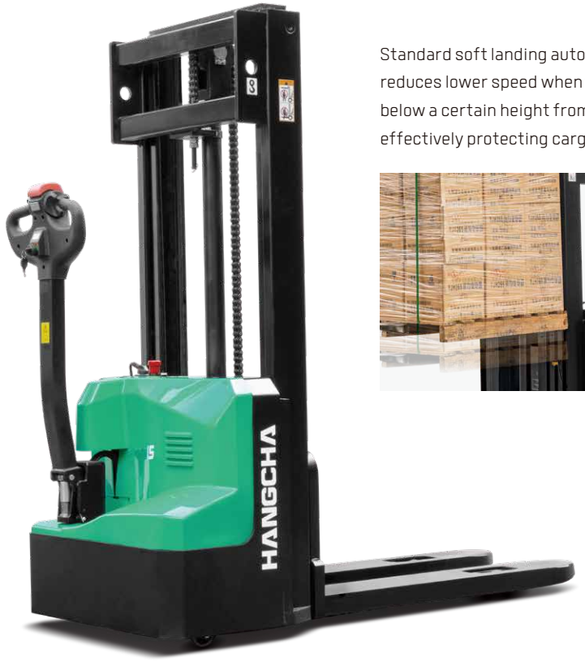

Standard soft landing automatically reduces lower speed when forks are below a certain height from the ground, effectively protecting cargo safety.

Features

Truck	Standard	Options
48V Permanent Magnet Brushless Motor	●	
Drive Controller	●	
Hydraulic Pump Controller	●	
Hydraulic Power Unit	●	
Polyurethane Wheels	●	
Fork Length 1150mm	●	
Fork spread 680mm	●	
Fork Surface Ground Clearance 85mm	●	
Battery	●	
On-board Charger	●	
Height Adjustable additional Wheels	●	
Dual Load Wheels	●	
Proportional Lifting	●	
Fork Length 1220mm		○
PC Panel		○
Universal Key Switch		○
2-3.6m Mast		○
Controls and instruments		
MultiFunction Tiller with Key Switch and Display	●	
Tiller PressDown Timer		○
Safety		
Horn	●	
Emergency PowerOff Switch	●	
Electromagnetic Brake	●	
Left/Right Rearview Mirrors		○

LITHIUM POWERED

LI-ION TECHNOLOGY

INNOVATIVE LITHIUM-ION

EMPOWER YOURSELF WITH THE BEST

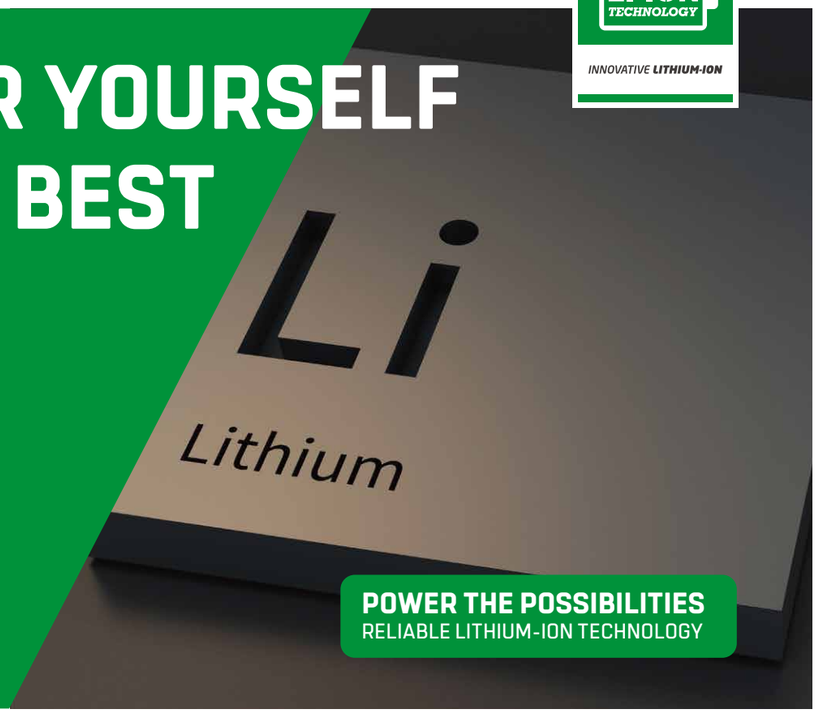

V48 LITHIUM ION

POWER THE POSSIBILITIES
RELIABLE LITHIUM-ION TECHNOLOGY

LITHIUM BATTERY ADVANTAGES

Long service life

2000 full charging cycles with at least 75% residual capacity.

Cold area application

Li-Ion batteries maintain high performance at temperatures below freezing.

Return on investment

Add flexibility to your operation,cost-saving in the long term, increased efficiencies.

High safety and reliability

Intelligent battery management monitoring every important function, no emission of battery gasses.

Maintenance free

No topping up of water or checking acid levels.

Opportunity charging

Full performance during several shifts thanks to effective interim charging.

High energy density

The high energy density of the Li-Ion battery ensures long working times and increases the high availability.

FEATURES & BENEFITS THE HANGCHA DIFFERENCE

Efficiency

By quick opportunity charging any downtime, such as a lunch break, can be efficiently used and the battery is recharged in a very short period of time. Interim charging does not affect the battery service life.

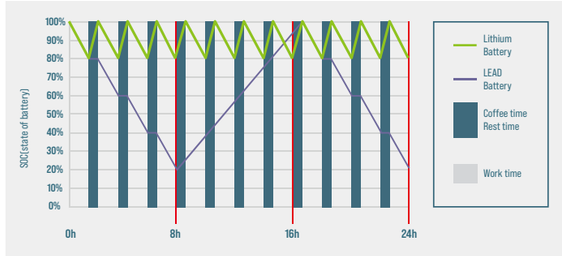

Safety

/ Intelligent battery management monitoring every important function.
/ Higher user safety, thanks to acid-free use.
/ User friendly due to avoided battery change.
/ No emission of battery gasses.

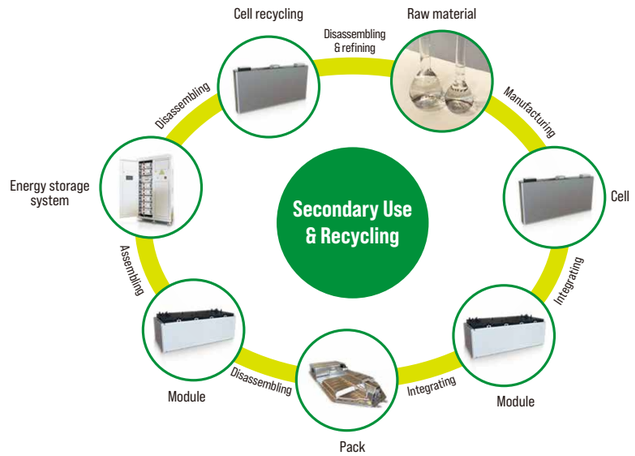

QUESTION 1

Q: What are the characteristics of lithium batteries, especially when used in high and low temperature environments?

Charging temperature:	0℃-55℃
Discharge temperature:	-20℃-65℃
Storage environment temperature:	-20℃-55℃

After the truck key switch is closed, the instrument battery condition needs to be checked:
1. Confirm that there is no battery system alarm message on the instrument panel.
2. Please check the remaining power before use. It is recommended to use the SOC between 50% and 100%.
3. If the SOC is lower than 20%, it is not recommended to continue using it. Please charge it as soon as possible.

QUESTION 2

Q: What is the charging time and usage time calculation of forklift lithium battery?

1. Available power of lithium battery (kWh) = rated voltage × rated power × 90% (To avoid over-discharge damaging the battery, the forklift is equipped with low power protection (less than 10%)).
2. Charging time (h) = rated capacity of lithium battery (Ah) × 90% ÷ charger output current (A).
3. The power consumed for charging (kWh) = the available power of the lithium battery ÷ 93% (the charging efficiency of the charger is calculated as 93%).
4. Usage time (h) = available power of lithium battery ÷ energy consumption data.

For specific energy consumption values, please refer to the technical table on the sharing platform.

QUESTION 3

Q: How does Hangcha BMS work to ensure the safety of the lithium battery?

HANGCHA BMS (battery management system) can monitor the cells at all times. As a result, hangcha lithium power is the reliable solution.

Battery Safety Management:
Overcharge/over discharge protection
Overcurrent/over-temperature/low- temperature protection
Multi-level fault diagnosis protection
Double fault monitoring

Battery Parameter Detection:
Battery voltage detection and analysis
Battery current detection and analysis
Battery temperature detection and analysis

Equilibrium Management:
Equalization based on voltage mode
Equalization based on time mode
Equalization based on battery cell SOC
Active/passive equalization optional

Other Features:
Low cost,low power consumption
Historical data record
Flexible cascade expansion
CRC data validation

Technical data

Distinguishing mark	1.1	Manufacturer (abbreviation)		HANGCHA GROUP CO.,LTD.			
	1.2	Manufacturer's type designition		CDD12-XAMN12-ISH	CDD15-XAMN12-ISH	CDD12-XAMN12-SH	CDD15-XAMN12-SH
	1.3	Drive: electric (battery type, mains, ...), diesel, petrol, fuel gas		Electric	Electric	Electric	Electric
	1.4	Operator type: hand, pedestrian, standing, seated, order-picker		pedestrian	pedestrian	pedestrian	pedestrian
	1.5	Rated capacity/rated load	kg	1200	1500	1200	1500
	1.6	Load centre distance	c (mm)	600	600	600	600
	1.8	Load distance, centre of drive axle to fork	x (mm)	790	790	790	790
	1.9	Wheelbase	y (mm)	1213	1213	1213	1213
Weight	2.1	Service weight	kg	623	633	634	648
	2.2	Axle loading, laden front/rear	kg	633/1190	760/1373	640/1194	768/1380
	2.3	Axle loading, unladen front/rear	kg	453/170	460/173	459/175	468/180
Tyres, chassis	3.1	Tyres: solid rubber, superelastic, pneumatic, polyurethane		PU	PU	PU	PU
	3.2	Tyre size, front		Ø210×70	Ø210×70	Ø210×70	Ø210×70
	3.3	Tyre size, rear		Ø80×70	Ø80×70	Ø80×70	Ø80×70
	3.4	Additional wheels (dimensions)		Ø80×64	Ø80×64	Ø80×64	Ø80×64
	3.5	Wheels, number front/rear (× = driven wheels)		1×, 1/4	1×, 1/4	1×, 1/4	1×, 1/4
	3.6	Tread, front	b_{10} (mm)	585	585	585	585
	3.7	Tread, rear	b_{11} (mm)	520	520	520	520
Dimensions	4.2	Height, mast lowered	h_1 (mm)	Sheet1	Sheet1	Sheet1	Sheet1
	4.4	Lift	h_3 (mm)	Sheet1	Sheet1	Sheet1	Sheet1
	4.5	Height, mast extended	h_4 (mm)	Sheet1	Sheet1	Sheet1	Sheet1
	4.9	Height drawbar in driving position min./max.	h_{14} (mm)	890/1271	890/1271	890/1271	890/1271
	4.15	Height, lowered	h_{13} (mm)	85	85	85	85
	4.19	Overall length	l_1 (mm)	1733	1733	1733	1733
	4.20	Length to face of forks	l_2 (mm)	583	583	583	583
	4.21	Overall width	b_1/b_2 (mm)	820	820	820	820
	4.22	Fork dimensions DIN ISO 2331	s/e/l (mm)	60/170/1150	60/170/1150	60/170/1150	60/170/1150
	4.25	Fork spread	b_5 (mm)	680	680	680	680
	4.32	Ground clearance, centre of wheelbase	m_2 (mm)	25	25	25	25
	4.34.1	Aisle width for pallets 1000 × 1200 crossways	Ast (mm)	2020[1]	2020[1]	2020[1]	2020[1]
	4.34.2	Aisle width for pallets 800 × 1200 lengthways	Ast (mm)	2070[2]	2070[2]	2070[2]	2070[2]
	4.35	Turning radius	Wa (mm)	1460	1460	1460	1460
Performance data	5.1	Travel speed, laden/unladen	km/h	4.2/4.5	4.2/4.5	4.2/4.5	4.2/4.5
	5.2	Lift speed, laden/unladen	m/s	0.110/0.190	0.110/0.190	0.110/0.190	0.110/0.190
	5.3	Lowering speed, lade/unladen	m/s	0.150/0.200	0.150/0.200	0.150/0.200	0.150/0.200
	5.8	Max. gradeability, laden/unladen	%	6/10	6/10	6/10	6/10
	5.10	Service brake		Regenerative	Regenerative	Regenerative	Regenerative
Electric-engine	6.1	Drive motor rating S2 60 min	kW	0.65	0.65	0.65	0.65
	6.2	Lift motor rating at S3 15 %	kW	2.2	2.2	2.2	2.2
	6.4	Battery voltage/nominal capacity	(V)/(Ah)or kWh	48/45	48/45	48/35	48/45
	6.5	Battery weight	kg	25	25	9.1*4	11.1*4

Note: 1) According to VDI2198 standard+276mm. 2)According to VDI2198 standard+163mm.

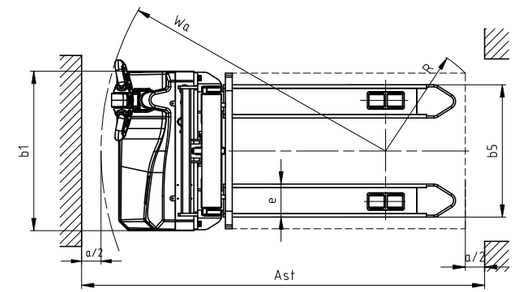

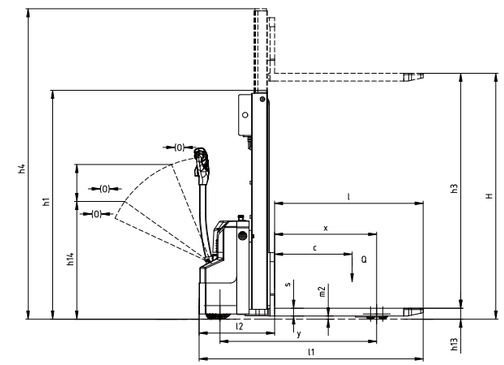

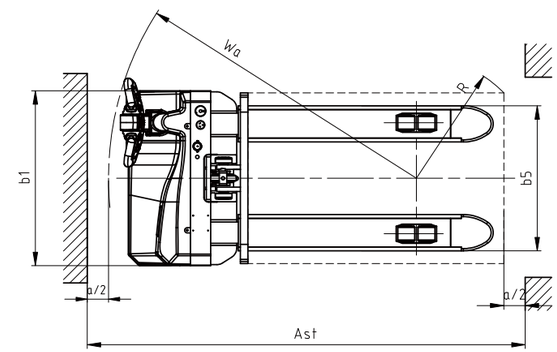

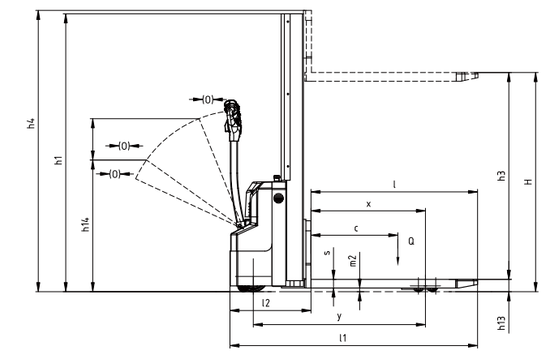

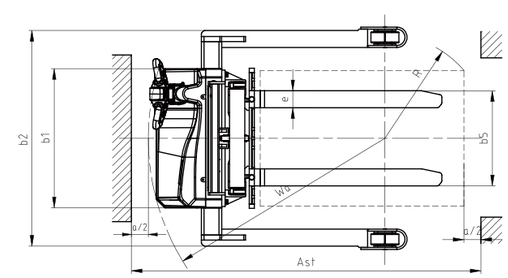

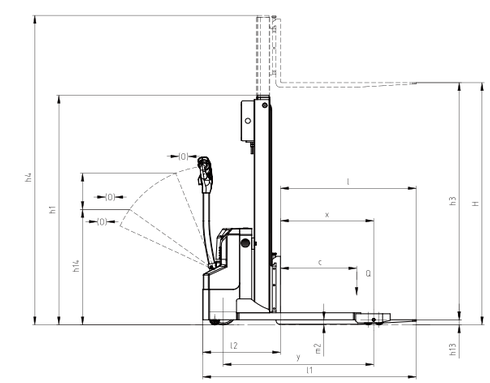

Sheet 1

Mast type	Max. lifting height h_3	Ground clearance, fork ($H=h_3+h_{13}$)	Lowered height h_1	Extended height h_4	Free lift	Load capacity at 600mm	
						1.2t	1.5t
	mm	mm	mm	mm	mm	kg	kg
Duplex full-free wide view	1940	2025	1572	2592	0	1200	1500
	2440	2525	1772	2992	0	1200	1500
	2640	2725	1922	3292	0	1000	1200
	2940	3025	2072	3592	0	900	1000
	3240	3325	2222	3892	0	750	800
	3540	3525	2322	4092	0	600	600

Sheet 2

Mast type	Max. lifting height h_3	Ground clearance, fork ($H=h_3+h_{13}$)	Lowered height h_1	Extended height h_4	Free lift	Load capacity at 600mm	
						1.2t	1.5t
	mm	mm	mm	mm	mm	kg	kg
single cylinder single mast	1440	1500	1916	1916	0	1200	1500
	1690	1750	2041	2041	0	1200	1500
	1940	2000	2166	2166	0	1200	1500